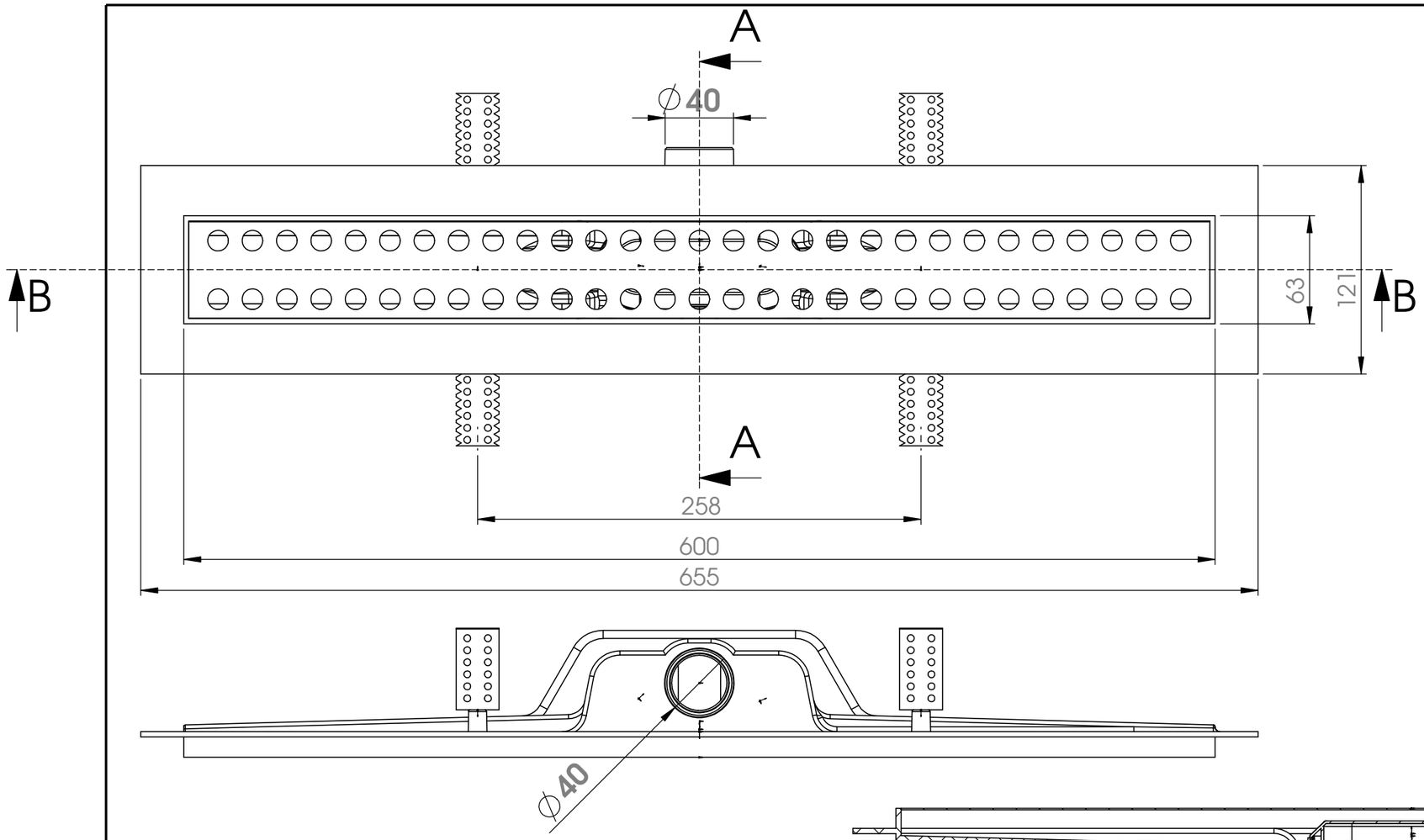


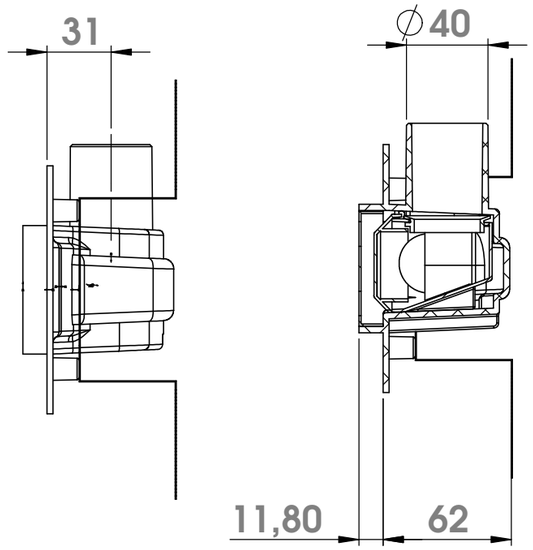


SECTION A-A
SCALE 1 : 3

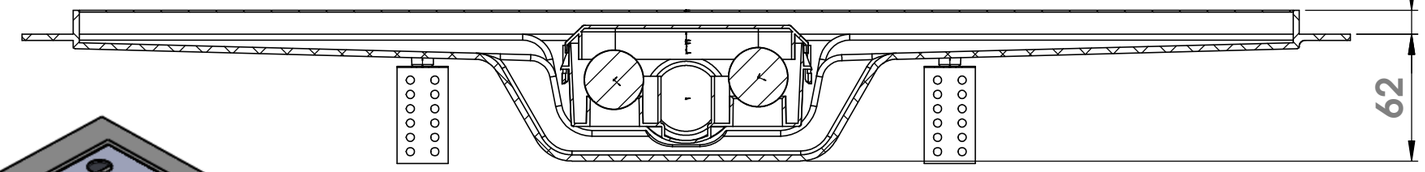


SECTION B-B
SCALE 1 : 3

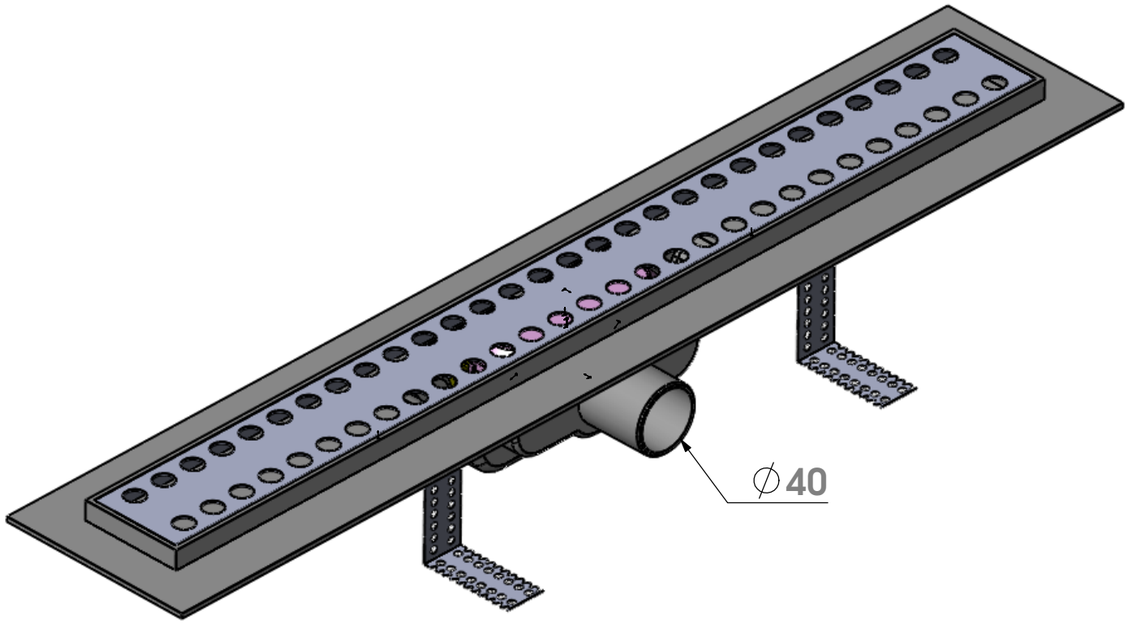


| | | | | | | | |
|---|---|---|---|---|---|---|---|
| | | FINISH: | | | DEBUR AND BREAK SHARP EDGES | DO NOT SCALE DRAWING | REVISION |
| | | | | | | Božić | |
| | NAME | SIGNATURE | DATE | | | TITLE: | |
| DRAWN | Š.Kahrimanović | | 14.07.2013 | | | Sklop sifona 600 mm | |
| CHK'D | Š.Kahrimanović | | 14.07.2013 | | | | |
| APPV'D | Boro Bozic | | | | | | |
| MFG | | | | | | | |
| Q.A | | | | MATERIAL: | | DWG NO. | A3 |
| | | | | | | | |
| | | | | WEIGHT: | | SCALE:1:5 | SHEET 1 OF 1 |